File Number	NDT500975	Version	1	Implementation Date	20190620

1、Application

The NDC1-1250~2650 series of AC contactors (hereinafter referred to as contactors) have the AC 50Hz (or 60Hz) and the rated insulation voltage of 1000V, and are mainly used for the electric circuit with the rated working voltage of 690V and the rated working current of 1250~2650A as well as the AC-1 utilization category for remotely connecting and breaking the circuit.

2、Outline sketch of the contactor (only for reference)

NDC1-1250

NDC1-1350

NDC1-1450~2100

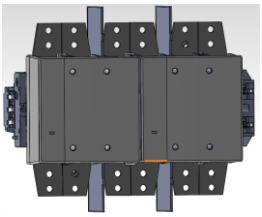

NDC1-2650

3、Model implications of the contactor

ND C 1 — □ □ □ + □

- □ — Optional accessories: Refer to 10.1 for details
- □ — Voltage specifications: Refer to 4.2 for the detailed optional voltage specifications
- □ — Coil type code: “AC” coil; “DC” coil; Wide voltage coil for “AC/DC”
- □ — Rated current: Working current under the AC-1 category and voltage of 690V
- 1 — Design code: 1
- C — Product code: AC Contactor
- ND — Enterprise code: “ Nader ” brand low-voltage electrical appliance

4、Technical parameter

4.1 Main contacts characteristics

Specification	NDC1-1250	NDC1-1350	NDC1-1450(L)	NDC1-1700(L)	NDC1-2100(L)	NDC1-2650
Rated current Ie /A	1260	1350	1450	1700	2100	2650
Load type	AC-1					
Agreed thermal current of the free air Ith /A	1260	1350	1450	1700	2100	2650
Rated insulation voltage Ui /V	1000					
Rated voltage Ue /V	660/690					
Impulse withstand voltage Uimp /kV	12					
Rated making capacity（Ue≤690V）	5000					

Rated breaking capacity /A（Ue≤690V）			4000					
Short time withstand current (starting from the cold state, θ≤40℃, no current 60 minutes before)		1s	8000	8000	8000	13000	13000	13500
		10s	5200	5200	6000	10000	10000	12000
		30s	4000	4000	4500	7250	7250	9000
		1min	3000	3000	4000	5600	5600	7000
		10min	2000	2000	2600	3000	3000	4000
Mechanical life		Mechanical life 10^4	80					40
		Operating frequency /times．h^{-1}	≤600					
Electrical life	Ue≤440V	Electrical life 10^4	20	20	15		10	10
		Operating frequency /times．h^{-1}	≤200					50
	Ue≤690V	Electrical life 10^4	15	9	8	7	5	3
		Operating frequency /times．h^{-1}	≤150					50
Average impedance of each pole（mΩ）			0.12	0.1				
SCPD[1)]		Model [2)]	RT-17		STF-2300A			RSK3000A
		Rated current /A	1250	1350	2300			3000
Weight /kg			15	21	27	29	31	32
Accessories			Auxiliary contact NF1 series, reed type auxiliary contact F1-11DS/C1, delay auxiliary contact NS1 series					
Main circuit connection capacity		Number of wiring banks	2	2	2	3	4	6
	wire size	area /mm2	500×2	500×2	500×2	500×3	500×4	500×6
		perimeter /mm	210×2	210×2	210×2	210×3	210×4	210×6
		Cord/mm²	58					
Impact resistance 1/2 sine wave =11ms		contactor opened (gn)	6					
		contactor closed (gn)	15					
Anti-vibration performance 8…30 Hz		contactor opened (gn)	2					
		contactor closed (gn)	4					

note： 1）SCPD：RT-17、STF-2300A 、RSK3000A；2）Ue=660V/690V；

4.2 Coil control circuit characteristics

Model			NDC1-1250	NDC1-1350	NDC1-1450(L)	NDC1-1700(L)	NDC1-2100(L)	NDC1-2650
Normal coil	Rated control voltage Uc /V		AC:48(only quick response coil) 110~120 220~230 380~400 (50/60Hz) DC: 48(only quick response coil) 110 220	AC: 110 220 380（50/60Hz） DC: 220~250	AC:110 110~120 220 220~230 240 277 380 380~400 415~440（50/60Hz） DC:110 125 220~250 250			AC:220~230 240~250 380~400 415~440 DC:220~250
	Pull-in voltage range		85%Uc～110%Uc					
	Discharge voltage range		20%Uc～75%Uc（AC）、10%Uc～70%Uc（DC）					
	AC coil	Pull-in time /ms	≤80（normal） ≤60（quick）	40～80	40～75			40～80
		Discharge time /ms	≤180（normal） ≤80（quick）	100～200	100～170			100～200
		Pull-in power consumption /VA	≤1700(normal) ≤1000(quick)	≤2200	≤2200			≤3000
		Retention power consumption /VA	≤27（normal） ≤47（quick）	≤60	≤44			≤50
	DC coil	Pull-in time /ms	≤80（normal） ≤20（quick）	60~70	50~60			60~70

		Discharge time /ms		≤80（normal） ≤50（quick）	40~60	45~60	45~60
		Pull-in power consumption /W		≤1700（normal） ≤733（quick）	≤2400	≤2500	≤3000
		Retention power consumption /W		≤27（normal） ≤48（quick）	≤15	≤16	≤25
Wide voltage coil	Rated control voltage Uc /V			AC/DC:100~250V；AC/DC:48~132V（only NDC1-1250）			
	Pull-in voltage range			85%Ucmin～110%Ucmax			
	Discharge voltage range			0.48Ucmin-0.52Ucmin			
	100~250V AC/DC	Pull-in time /ms	PLC control	70~85	60~75	70~85	\
			Power contro	70~85	60~75	70~85	\
		Discharge time /ms	PLC control	21~25	21~25	21~25	\
			Power contro	100~160	60~120	100~160	\
		Pull-in power consumption VA/W		≤600	≤900	≤1100	\
		Retention power consumption VA/W		≤16	≤18	≤18	\
	48~132V AC/DC	Pull-in time /ms	PLC control	70~85	\	\	\
			Power control	70~85	\	\	\
		Discharge time /ms	PLC control	21~25	\	\	\
			Power control	80~140	\	\	\
		Pull-in power consumption VA/W		≤600	\	\	\
		Retention power consumption VA/W		≤13	\	\	\
Control circuit connection capacity		Cord/mm²	1piece	2.5			
			2piece				
		Hard wire /mm²	1piece	4			
		Tightening torque /N.m		0.8~1.2			

5、Working condition

1）Free from acidic, alkaline or other corrosive gases in the ambient air;

2）Temperature：

Storage：-60℃～+80℃；

Operating：-25℃～+40℃；

Maximum allowable temperature at the standard control voltage：-40℃～+70℃（note1）。

3）Altitude in the installation place is no more than 3,000m (derating is required in case of being above 3,000m);

4）The relative air humidity at the installation site should not exceed 95%. Condensing should be avoided in the working environment.

5）High temperature or high altitude environment capacity reduction：

High temperature or high altitude environment capacity reduction, according to the following data reference

AC-1 Temperature drop capacity coefficient（Elevation≤3000m）

Type		NDC1-1250	NDC1-1350	NDC1-1450(L)	NDC1-1700(L)	NDC1-2100(L)	NDC1-2650
current /A	≤40℃	1260	1350	1450	1700	2100	2650
	≤50℃	1140	1250	1300	1600	1950	2500
	≤60℃	1040	1100	1190	1450	1750	2300
	≤70℃(Uc 下)	900	1000	1080	1300	1500	2120

Note 1: During working at the limit operating temperature, the coil shall operate at the rated voltage, and the average temperature within 24h shall not be more than 35℃;If the low temperature -40℃ conditions are required, special notes shall be made.

Elevation drop capacity coefficient（temperature≤40℃）

Elevation(meter)	Voltage capacity coefficient	Current capacity coefficient
3500m	0.9	0.92
4000m	0.8	0.9
4500m	0.7	0.88
5000m	0.6	0.86

6 Wiring diagram

6.1 **Wiring diagram of the normal coil and main circuit**

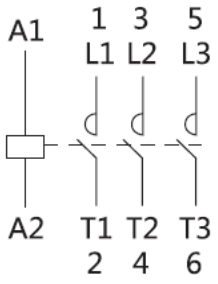

NDC1-1250

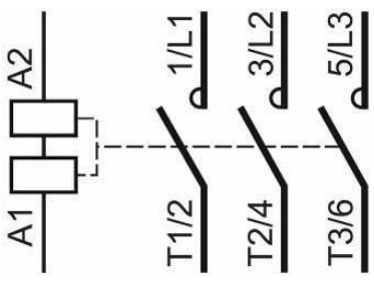

NDC1-1350~2100

6.2 **Wiring control plan of the wide voltage coil**

（1）Turn the dial switch to PLC B for control of power supply sides A1-A2, and perform control according to the control logic with the control diagram shown below:

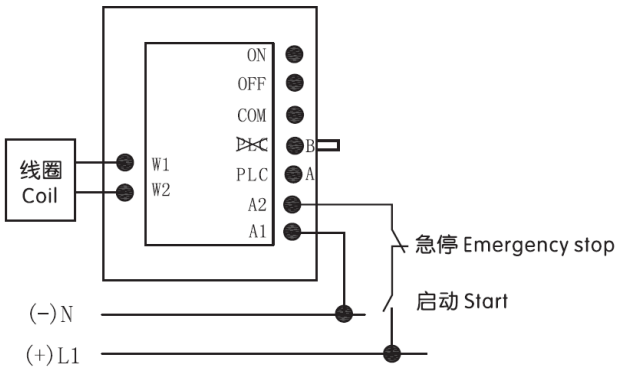

（2）PLC control

Turn the dial switch to PLC A with ON, OFF, COM connecting with PLC, and perform control according to the control logic with the control diagram shown below:

Note: PLC adopts the relay output type or transistor-source output type.

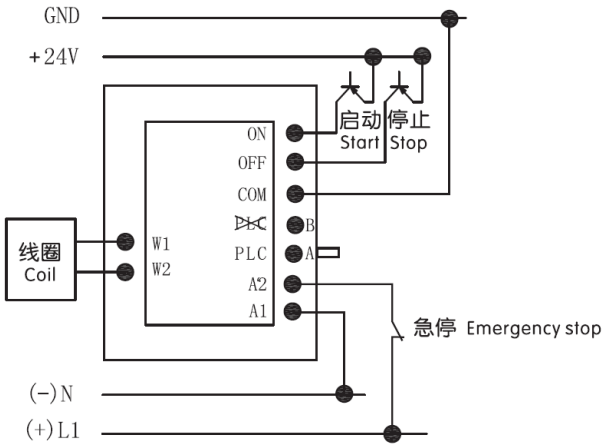

（3）Control of the active command appliance: Place the dial switch in PLC A with ON, OFF, COM connecting with the command appliance (button), and perform control according to the control logic with the control diagram shown below:

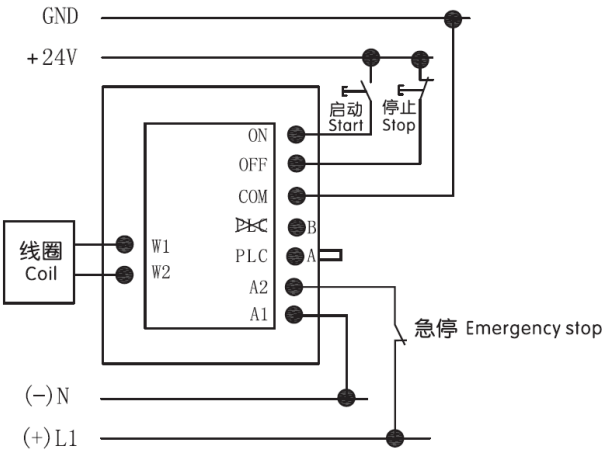

Control coil control logic wave form

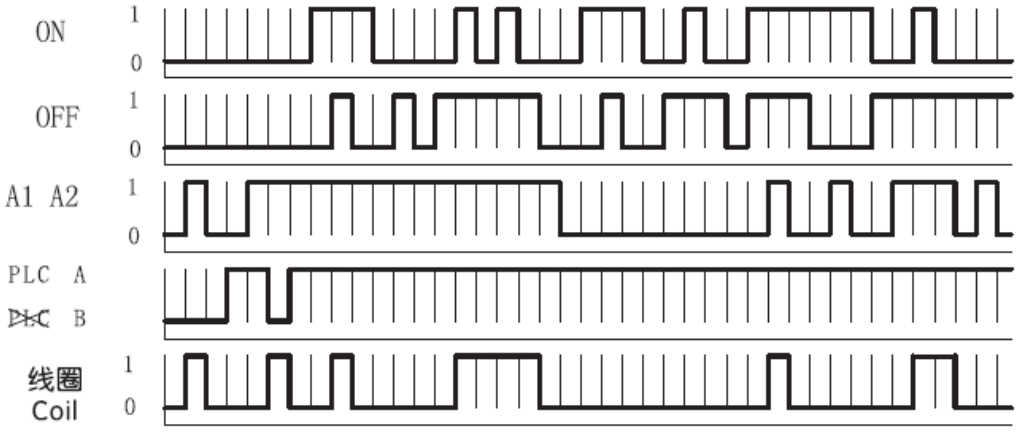

Note：when on PLC B, ON or OFF status does not influence the coil, so omiting the logic wave form.

7、Outline and installing dimensions

7.1 NDC1-1250 Outline and installing dimensions

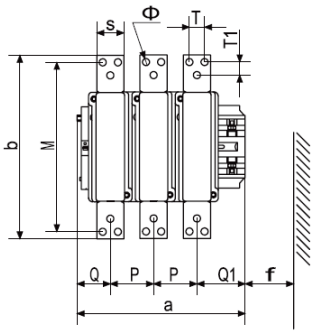

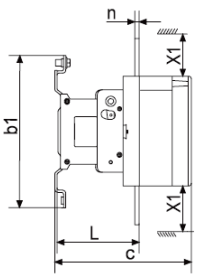

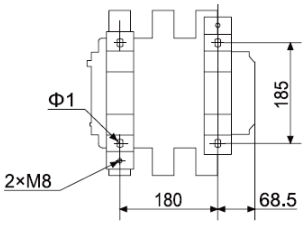

7.2 NDC1-1350 Outline and installing dimensions

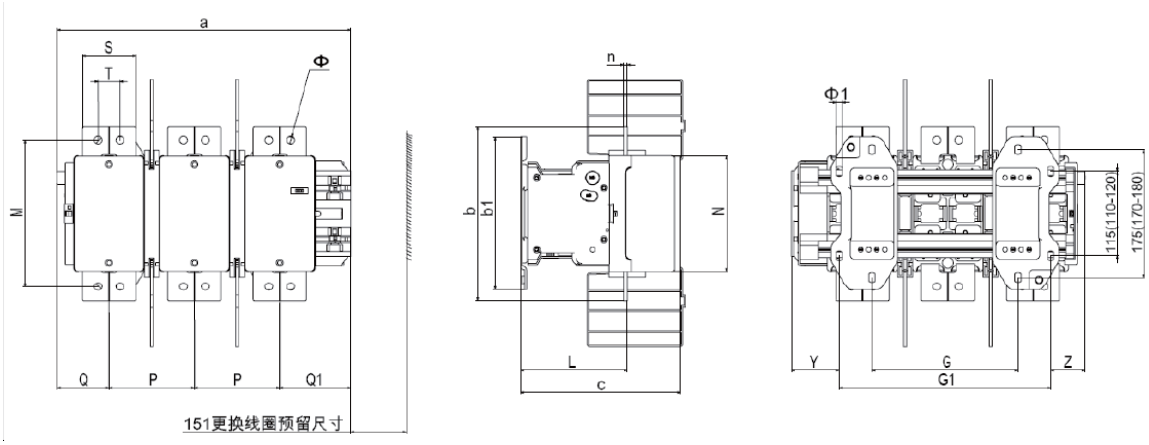

7.3 NDC1-1450～2100 Outline and installing dimensions

NDC1-1450~1700 normal type

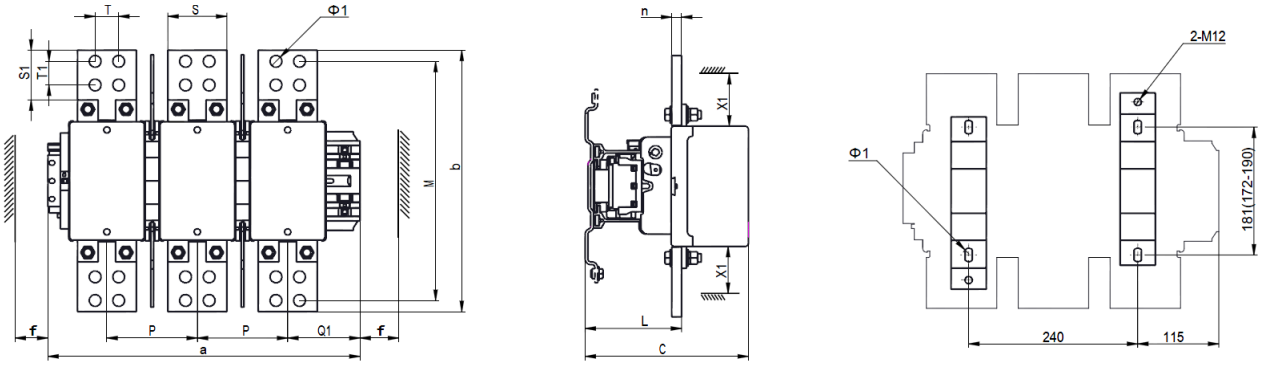

NDC1-2100 normal type

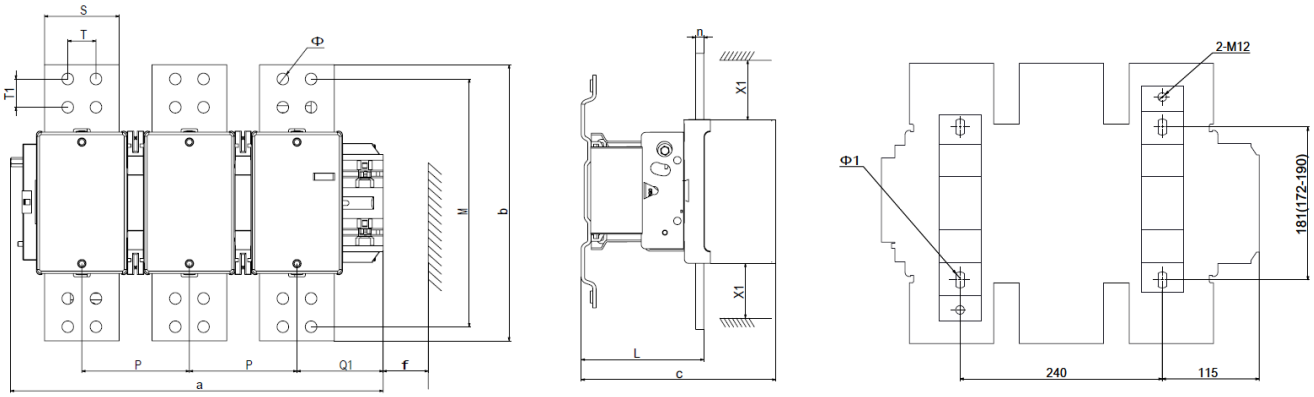

NDC1-1450~2100 L type

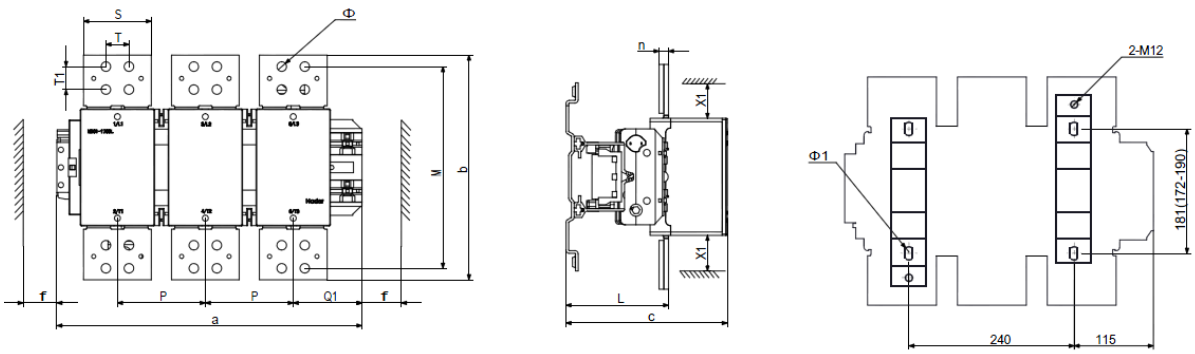

7.4 NDC1-2650 Outline and installing dimensions

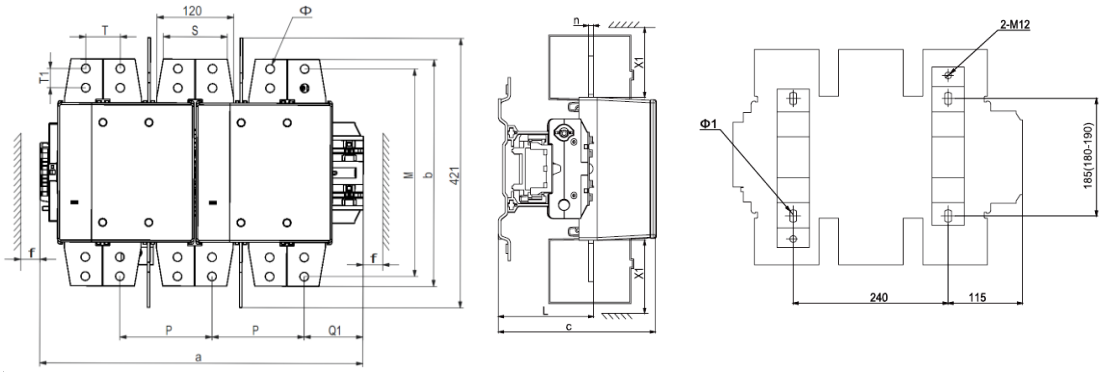

Unit: mm

NDC1	a	b	b1	c	L	n	p	Q1	M	Φ	Φ1	S	S1	T	T1	f	X1	
																	≤500V	>500V
1250	309	338	280	251	155	10	80	89	312	13	10.5	50	/	28	24	151	20	30
1350	402.3	237.4	208.5	219	146	5	117	97.3	200	11	8.5	73	/	30	/	151	90	100
1450	448	378	244	238	140	12	130.5	104	344	13.5	10.5	100	69	34	34	170		
1700	448	376	244	238	140	14	130.5	104	344	13.5	10.5	100	70	34	34	170		
2100	448	332	244	238	140	10	130.5	104	344	13.5	10.5	90	/	34	34	170		
1450L	448	332	244	238	151	14	130.5	104	298	13.5	10.5	100	/	34	34	170		
1700L	448	332	244	238	151	14	130.5	104	298	13.5	10.5	100	/	34	34	170		
2100L	448	332	244	238	151	14	130.5	104	298	13.5	10.5	100	/	34	34	170		
2650	507	354	254.5	250	150	8	144	92	324	13.5	10.5	100	/	54	30	200		

Note: f: Minimum distance of the coil removed; X1: Minimum electrical clearance (flashover distance)

The L, n, P, Q1, M, Φ, Φ1, S, S1, T, T1 are designed with the tolerance of object about 1mm, others are 5mm.

8、Installation Mode

Bolt installation

9、Packaging and Storage

Each set of assembled product is packed in a case, which should be stored in a warehouse with the air ventilation and the temperature between -60℃ and +80℃. No acidic alkaline or other corrosive gas exists in the ambient air in the warehouse.

10 Accessories and Delivery List

10.1 Accessories

Contactor products are supplied with optional accessories. If accessories are not required, it is not necessary to select them. Currently, NDC1-1250~2650 series products can be installed with the following optional accessories:

Auxiliary contact NF1 series, reed type auxiliary contact F1-11DS/C1, delay auxiliary contact NS1 series.

NF1 Auxiliary contact:

Auxiliary contact	Type			NF1						
	Rated insulation voltage Ui V			690						
	Rated operating voltage Ue V			AC:380 DC:220						
	Agreed thermal current of the free air Ith A			10						
	Rated operating current Ie/A	AC-15（360VA）		0.95						
		DC-13（33W）		0.15						
	Minimum connected load			17V 5mA						
	Installation type			top						
	Contact type	code		11	20	02	40	31	13	04	22
		Contact number NO		1	2	0	4	3	1	0	2
		Contact number NC		1	0	2	0	1	3	4	2
	Connection capacity	cord	1 piece/ 2 pieces	$2.5mm^2$						
		Hard wire	1 piece/ 2 pieces	$4.0mm^2$						
		Tightening torque		0.8～1.2N.m						

F1-11DS/C1 Auxiliary contact：:

Auxiliary contact	Type			F1-11DS/C1
	Rated operating voltage Ue max			60V
	Impulse withstand voltage Uimp			6KV
	Rated insulation voltage Ui			600V
	Agreed thermal current Ith（≤60°）			0.5A
	Minimum connected load			5V/10mA
	Installation type			top
	Contact type			1NC 1NO
	Rated operating current AC-15/DC-13		24V	0.1A
			50V	0.05A
	life	Mechanical life, maximum frequency		1,000,000 times, 1200 • h^{-1}
		Electrical life, maximum frequency		700,000 times,900 times h^{-1}（DC-13、AC-15）
	Connection capacity	cord：1 piece/2 pieces		0.75～$2.5mm^2$
		Hard wire：1 piece/2 pieces		1～$4.0mm^2$
		Tightening torque		0.8～1.2N.m

NS1 Time delay auxiliary contact:

Time delay auxiliary contact	Type			NS1
	Rated insulation voltage Ui V			690
	Rated operating voltage Ue V			AC:380 DC:220
	Agreed thermal current of the free air Ith A			10
	Rated operating current Ie/A	AC-15（360VA）		0.95
		DC-13（33W）		0.15

	Minimum connected load		24V 10mA					
	Installation type		top					
	Contact number		1NC 1NO					
Time delay parameter	Time delay code		220	222	224	320	322	324
	Time delay type		power on time delay			power off time delay		
	Time delay time/s		0.1～3	0.1～30	10～180	0.1～3	0.1～30	10～180
	repetitive error		±5%					
Connection capacity	cord	1 piece/ 2 pieces	2.5mm²					
	Hard wire	1 piece/ 2 pieces	4.0mm²					
	Tightening torque		.8～1.2N.m					

G1 series coil surge suppression module

Type		Specification for coil voltage	Function
G1-R series (resistance capacity) Coil surge suppression module	G1-01R/C1-2650	AC24~48V	◆ Effectively protect circuits that are sensitive to “high frequency” interference. For sinusoidal voltage waveforms, where the total harmonic distortion is less than 5% ◆ The maximum voltage is limited to 3 Uc and the maximum oscillation frequency is limited to 400 Hz. ◆ The disconnection time is slightly increased (1.1 to 1.3 times the normal time).
	G1-02R/C1-2650	AC50~110V	
	G1-03R/C1-2650	AC127~240V	
	G1-04R/C1-2650	AC250~440V	
G1-K series (pressure sensitive) Coil surge suppression module	G1-01K/C1-2650	AC24~48V	◆ Effectively protect circuits that are sensitive to “overvoltage” interference. ◆ The maximum transient overvoltage limit is 2Uc. ◆ The disconnection time is slightly increased (1.1 to 1.5 times the normal time).
	G1-02K/C1-2650	AC50~110V	
	G1-03K/C1-2650	AC127~240V	
	G1-04K/C1-2650	AC250~440V	

10.2 Ordering and delivery list

The following information shall be provided during ordering:

A full range of models and specifications, ordering quantity.

For optional accessories, add the accessory specifications before the body model specifications.
Example: NDC1-2100 AC220V 50/60Hz+NF1-22, 10 sets.

The product delivery list contains the following information:

NDC1-1250 product:

Product body×1, grounding screws of the main circuit×18sets, rounding screw ×1 set, phase insulated partitions ×4, user manual ×1.

NDC1-1350 product:

Product body×1, grounding screws of the main circuit×12sets, rounding screw ×1 set, phase insulated partitions ×4, user manual ×1.

NDC1-1450(L)~2650 product:

Product body×1, grounding screws of the main circuit×24sets, rounding screw ×1 set, phase insulated partitions ×4, user manual ×1.

If provided with optional accessories, the default accessories will be installed on the contactor body.

Each set of connection bolts of the main circuit includes: bolt (M12) ×1, spring washer ×1, plain washer×1, nut ×1.

Each set of grounding bolts includes: bolt (M12) ×1, plain washer ×1.

11 Precautions

1) The installation site of the product should not be shaky or vibrant.

2) For vertical installation of the product, the gradient between the installation surface and the horizontal plane is no more than ±5°;

3) Reliable cabling is required to prevent the terminals from being burnt out due to abnormal heat at the terminals; therefore, regular maintenance is necessary;

4) In the course of use, after a certain number of turn-on and segmentation operations of the silver contact of the contactor, the surface of the silver contact surface will be singed or blackened. This does not affect the use, and it should not be polished.